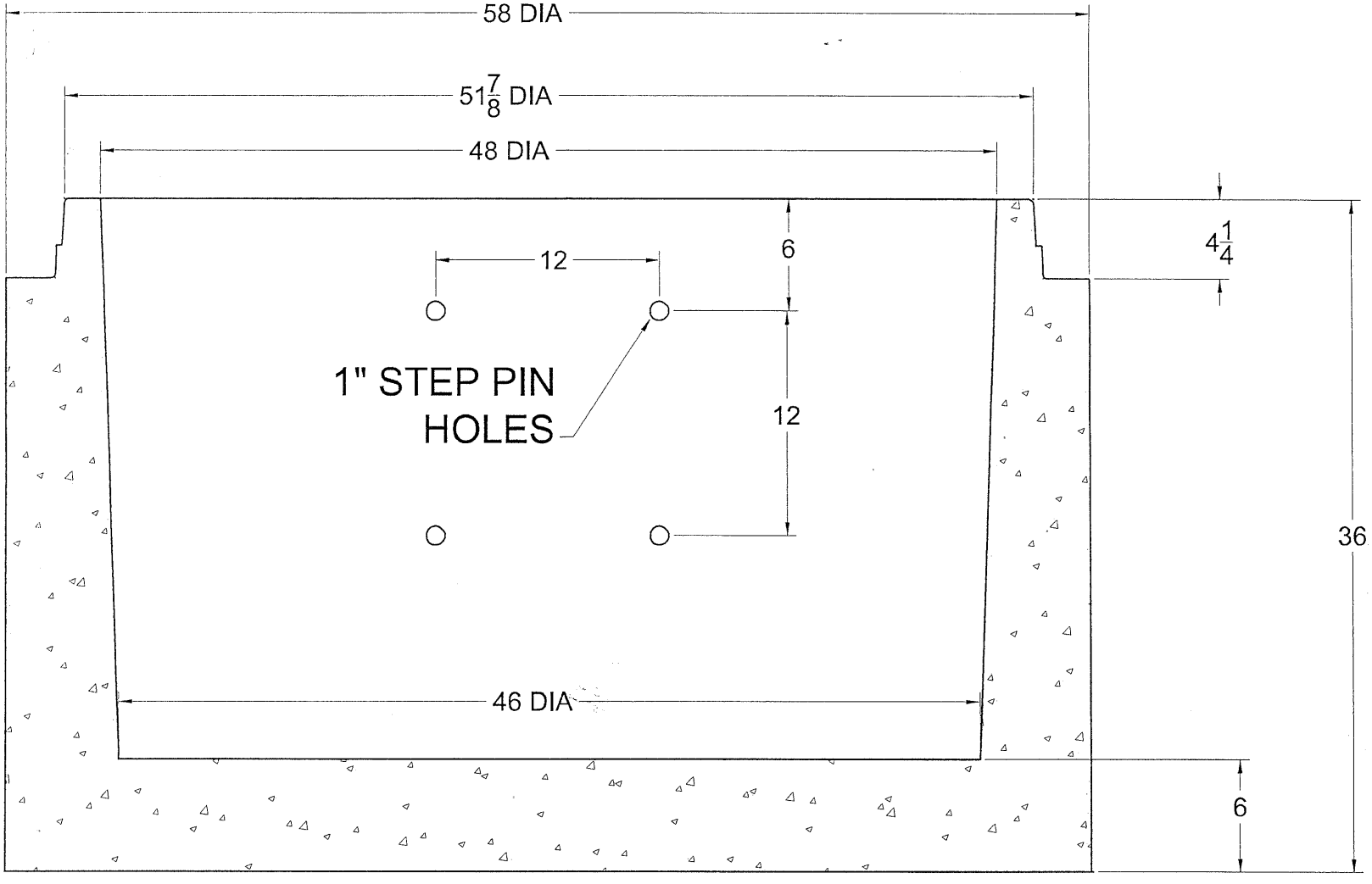

DIAMOND WATERWORKS
7520 Conrad Street
Burnaby, BC V5A 2H7
Phone : 604 415 5181
Fax : 604 415 5185

DRAWN BY: P.S DATE: 04/2007

APPROVED:

REVISION:

SCALE: NOT TO SCALE

LOAD RATING
H 20

MATERIAL SPECIFICATION
CONCRETE

COATING

ESTIMATED WEIGHT -
4836B - 4070 LBS
48" x 36 " MH

Note:-
All Dimensions are approximate

PART / DWG NUMBER
4836B

CATALOG NUMBER
4836B

4836B : 48" x 36" Manhole Base